T E10

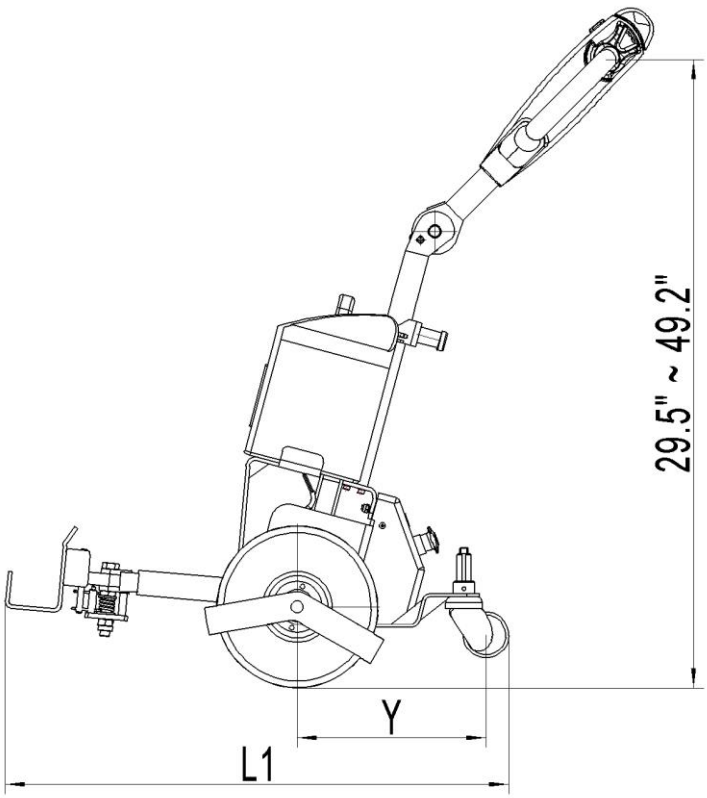

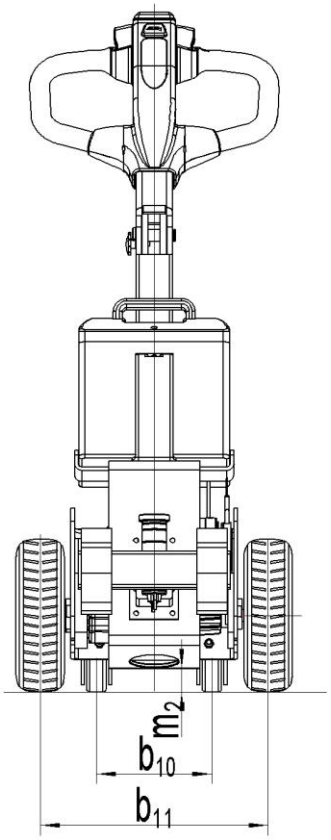

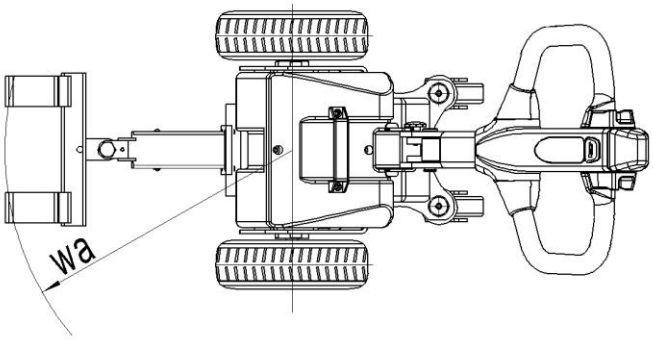

NOBLIFT 诺力

Type sheet for industrial tractor acc. to VDI 2198				
Distinguishing mark	1.2	Manufacturer`s type designation		T E10
	1.3	Power (battery ,diesel,petrol gas,manual)		Battery
	1.4	Operator type		Pedestrian
	1.5	Load Capacity / rated load	Q(lbs)	2200
	1.7	Rated drawbar pull	F (N)	200
	1.9	Wheelbase	Y (in)	12.8
Weight	2.1	Service weight	lbs	136
	2.3	Axle loading, unladen front/rear	lbs	101/35
Wheel chassis	3.1	Tires		R+PU(PU+PU)[1)]
	3.2	Tire size, front	∅ x w (in)	∅10X3.1
	3.3	Tire size, rear	∅ x w (in)	∅3X1.3
	3.5	Wheels, number front/rear(x=driven wheels)		2X+2/—
	3.6	Tread, front	b_{10} (in)	7.3
	3.7	Tread, rear	b_{11} (in)	15
Tires, Chassis	4.9	Height of tiller in drive position min./ max.	h_{14}(in)	29.5/49
	4.19	Overall length	l_1(in)	31.9
	4.21	Overall width	b_1 (in)	19.3
	4.32	Ground clearance, centre of wheelbase	m_2(in)	1.5
	4.35	Turning radius	Wa(in)	18.7
Performance data	5.1	Travel speed, laden/ unladen	mph	2.6/2.8
	5.5	Drawbar pull, laden/unladen	N	200 /–
	5.6	Max. drawbar pull, laden/unladen	N	450/–
	5.10	Service brake		Electromagnetic
E- Motor	6.1	Drive motor rating S2 60min	kW	0.4
	6.3	Battery acc. to DIN 43531/ 35/ 36 A, B, C, no		No
	6.4	Battery voltage, nominal capacity K5	V/Ah	24/24
	6.5	Battery weight	lbs	35.2
Additional data	8.1	Type of drive control		DC- speed control
	8.4	sound level at driver`s ear acc. to EN 12053	dB(A)	62

1) Optional non marking, non inflating tires